UNIVERSITY OF CAMBRIDGE INTERNATIONAL EXAMINATIONS
General Certificate of Education
Advanced Subsidiary Level and Advanced Level

CANDIDATE NAME									
CENTRE NUMBER						CANDIDATE NUMBER				

0482195546

PHYSICS **9702/31**

Advanced Practical Skills 1 **October/November 2010**

2 hours

Candidates answer on the Question Paper.

Additional Materials: As listed in the Confidential Instructions.

READ THESE INSTRUCTIONS FIRST

Write your Centre number, candidate number and name on all the work you hand in.
Write in dark blue or black pen.
You may use a soft pencil for any diagrams, graphs or rough working.
Do not use staples, paper clips, highlighters, glue or correction fluid.
DO **NOT** WRITE IN ANY BARCODES.

Answer **both** questions.
You will be allowed to work with the apparatus for a maximum of one hour for each question.
You are expected to record all your observations as soon as these observations are made, and to plan the presentation of the records so that it is not necessary to make a fair copy of them.
You may lose marks if you do not show your working or if you do not use appropriate units.

Additional answer paper and graph paper should be used only if it becomes necessary to do so.
You are reminded of the need for good English and clear presentation in your answers.

At the end of the examination, fasten all your work securely together.
All questions in this paper carry equal marks.

For Examiner's Use	
1	
2	
Total	

This document consists of **10** printed pages and **2** blank pages.

© UCLES 2010

BLANK PAGE

© UCLES 2010

You may not need to use all of the materials provided.

For Examiner's Use

1 In this experiment, you will determine the resistance of an unknown resistor.

You have been supplied with a chain of eight resistors, as shown in Fig. 1.1.

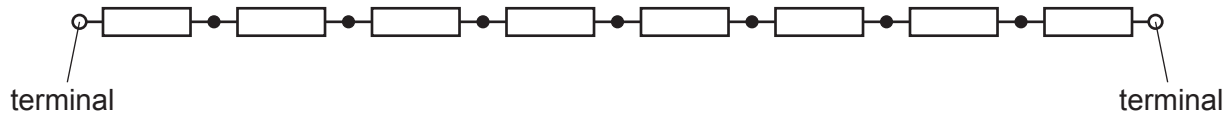

Fig. 1.1

Connection to one or more of the resistors can be made by attaching a crocodile clip between individual resistors.
The resistance of each individual resistor is 1000 Ω.
The formula for the total resistance R of resistors in series is

$$R = R_1 + R_2 + R_3 + ...$$

(a) (i) Set up the circuit in Fig. 1.2, with resistor X in the position shown.

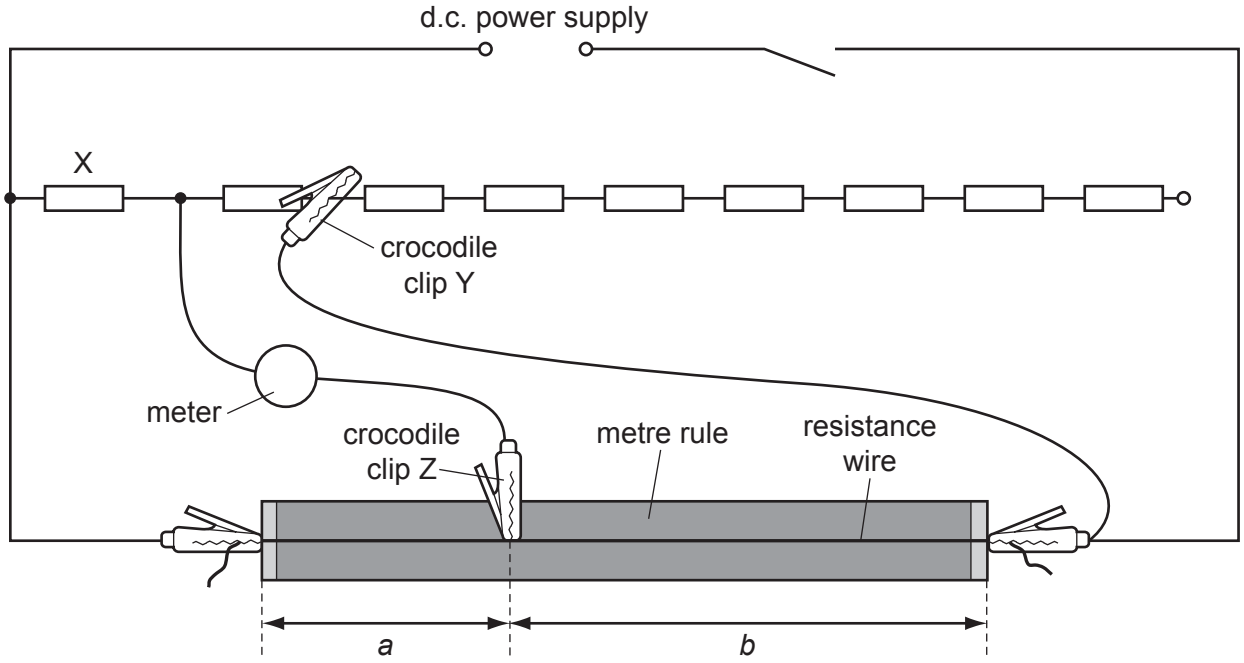

Fig. 1.2

Only the first resistor in the chain is included in the circuit. This has resistance R of 1000 Ω.

(ii) Place Z on the resistance wire and move Z until the meter reading is zero.

Measure and record lengths a and b.

a = ...

b = ...

For Examiner's Use

(b) Vary R by adjusting the position of Y on the chain of resistors.

Repeat **(a)(ii)** until you have six sets of readings of R, a and b.

Include values of $\frac{b}{a}$ in your table of results.

(c) **(i)** Plot a graph of $\frac{b}{a}$ on the y-axis against R on the x-axis.

(ii) Draw the straight line of best fit.

(iii) Determine the gradient of this line.

gradient = ...

© UCLES 2010

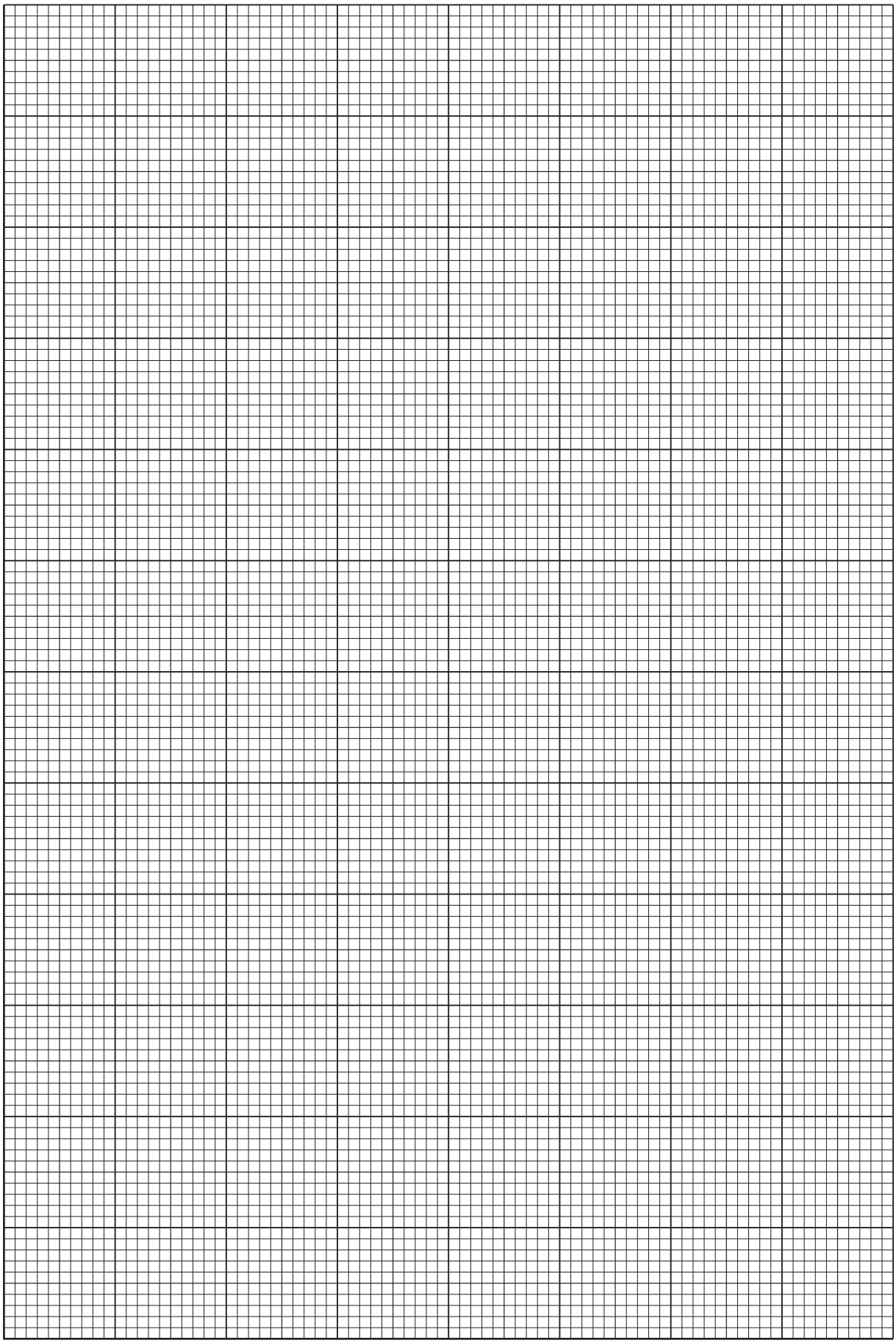

For Examiner's Use

For Examiner's Use

(d) The quantities a, b and R are related by the equation

$$\frac{a}{b} = \frac{X}{R}$$

where X is the resistance of resistor X.

Use your answer in **(c)(iii)** to determine the value of X.
Give an appropriate unit.

X = ...

(e) Using your graph, determine the value of R that would be needed for the lengths a and b to be equal to each other.

R = ...

© UCLES 2010

You may not need to use all of the materials provided.

For Examiner's Use

2 In this experiment, you will investigate how the motion of two masses connected by a string passing over a pulley depends on the difference between the two masses.

(a) Set up the apparatus with the pulley supported by the clamp. One possible way of doing this is shown in Fig. 2.1.

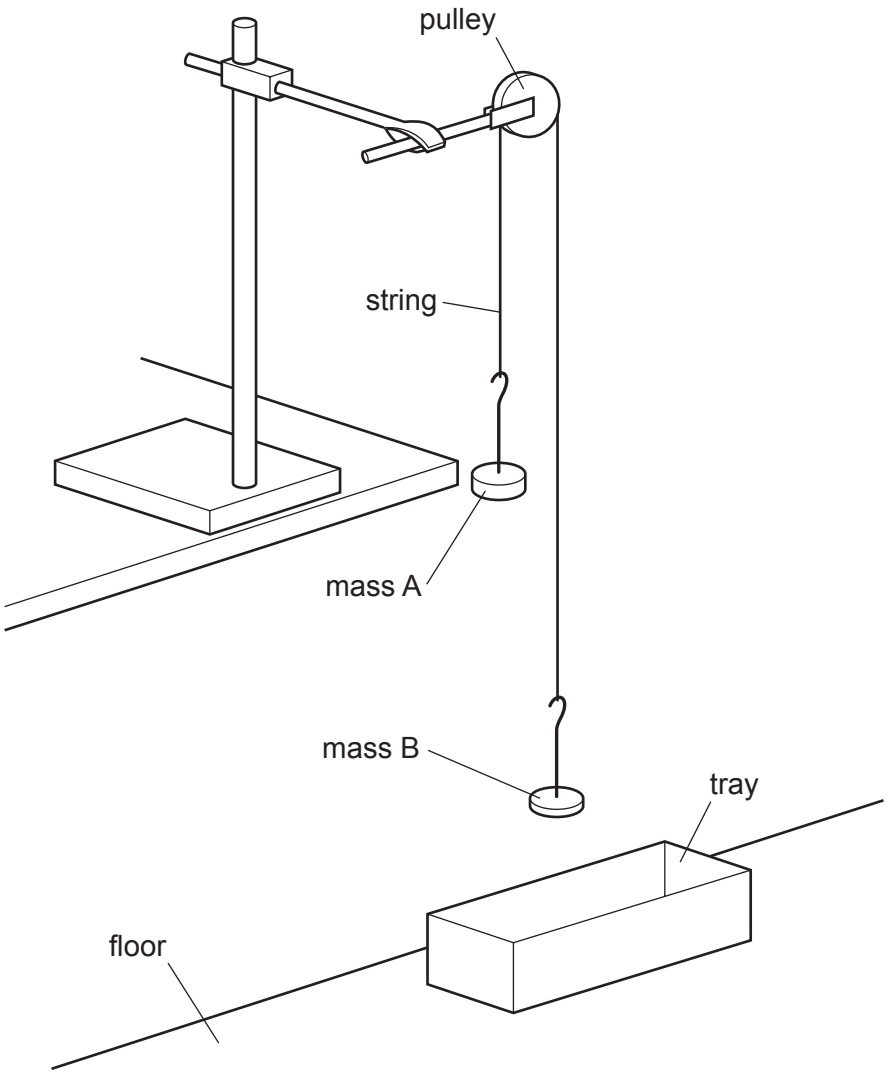

Fig. 2.1

Using the masses and hangers provided, make both the mass m_A of A and the mass m_B of B equal to 100 g. It must be possible to transfer masses **from B to A**.

(b) Adjust the position of the apparatus so that the masses and pulley overhang the bench.

© UCLES 2010

For Examiner's Use

(c) (i) Adjust the height of the apparatus so that the distance h between the bottom of mass A and the floor is approximately 1 metre, as shown in Fig. 2.2.

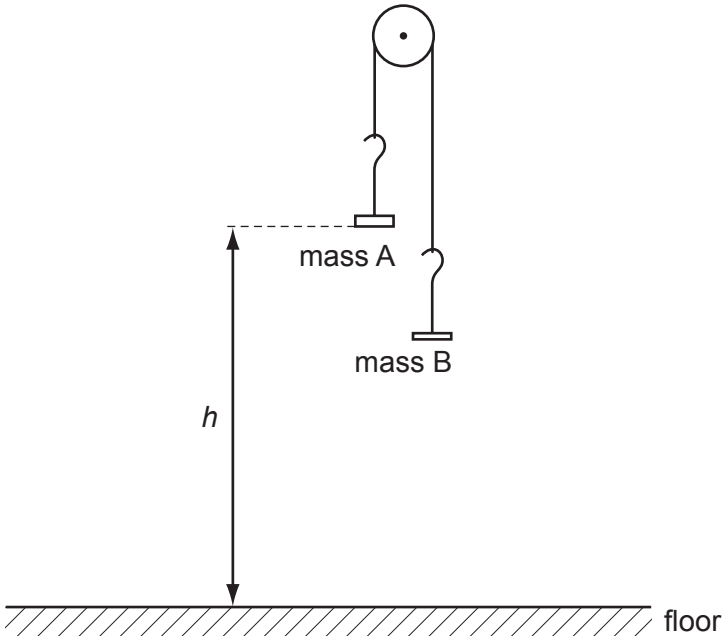

Fig. 2.2

(ii) Measure and record h.

h = ...

(d) (i) Transfer 10 g from mass B to mass A.

(ii) Record the mass m_A of mass A and the mass m_B of mass B.
Calculate the difference in mass $(m_A - m_B)$.

m_A = ...

m_B = ...

$(m_A - m_B)$ = ...

(iii) Release mass A from height h as recorded in **(c)(ii)** and determine the time t it takes to reach the floor.

t = ...

© UCLES 2010

(e) Estimate the percentage uncertainty in your value of t.

percentage uncertainty = ...

(f) Transfer another 10 g from mass B to mass A and repeat **(d)(ii)** and **(d)(iii)**.

m_A = ...

m_B = ...

$(m_A - m_B)$ = ...

t = ...

(g) It is suggested that the relationship between $(m_A - m_B)$ and t is

$$(m_A - m_B) = \frac{k}{t^2}$$

where k is a constant.

(i) Using your data, calculate two values of k.

first value of k = ...

second value of k = ...

© UCLES 2010

(ii) Justify the number of significant figures that you have given for your values of k.

For Examiner's Use

.....

.....

.....

(iii) Explain whether your results support the suggested relationship.

.....

.....

.....

.....

.....

(h) (i) Describe four sources of uncertainty or limitations of the procedure in this experiment.

1. .....

.....

2. .....

.....

3. .....

.....

4. .....

(ii) Describe four improvements that could be made to this experiment. You may suggest the use of other apparatus or different procedures.

1. .....

.....

2. .....

.....

3. .....

.....

4. .....

.....

BLANK PAGE

Permission to reproduce items where third-party owned material protected by copyright is included has been sought and cleared where possible. Every reasonable effort has been made by the publisher (UCLES) to trace copyright holders, but if any items requiring clearance have unwittingly been included the publisher will be pleased to make amends at the earliest possible opportunity.

University of Cambridge International Examinations is part of the Cambridge Assessment Group. Cambridge Assessment is the brand name of University of Cambridge Local Examinations Syndicate (UCLES), which is itself a department of the University of Cambridge.